Dave Schumann, General Manager
Customer Relations Group

Hello again from Jackson Center, fall is just around the corner with great opportunities to enjoy colorful leaves and cooler weather. This time of year can provide some of the best opportunities to get out and enjoy your Airstream.

This month I wanted to cover a topic that I have received various questions about recently: rubber torsion axles and how they work. Also are they better than axles with leaf springs?

Airstream has used both types of these axles over the years, but made the switch to rubber torsion axles around 1962. Henschen Axle (Dura-Torque) was the provider of this type of axle and the switch to Dexter (Torflex) axles was made around the end of 2005.

The following info will give you a quick look at rubber torsion axles.

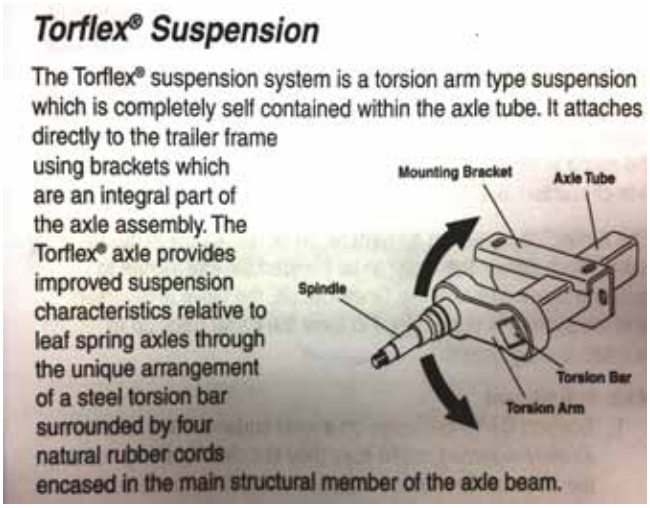

Cross section of axle tube and rubber spring rods

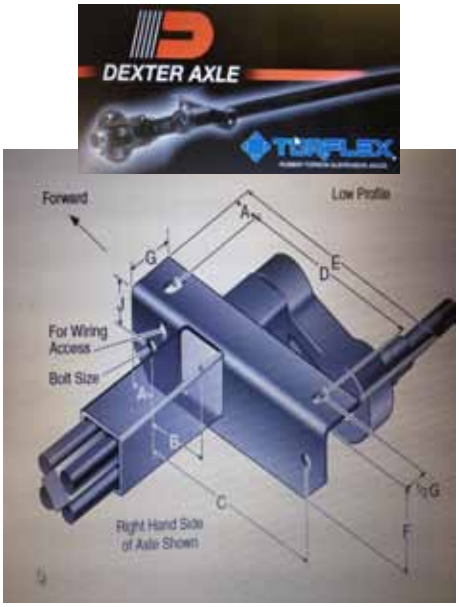

Construction

Rubber torsion axles in most cases start out as square stock tubes, just like any other axle. On a normal axle, the wheel would just slide onto a spindle and a bearing on the end of the tube - with this configuration (rubber torsion), the wheel slides onto a stubby spindle protruding from one end of a lever arm, aka the torsion arm; the other end of this short arm rides on a bearing of its own on the end of the axle tube. This allows the lever arm - and subsequently, the wheel - to rotate around the tube. This basic setup is also known as a trailing-arm suspension.

A trailing arm suspension will almost invariably give a softer and higher-quality ride than any solid axle, owing primarily to the fact that movement at one wheel doesn't have to affect the other. This is an important consideration if you do a lot of towing over dirt, grass with hidden potholes and in inclement conditions, since the independent suspension will keep your trailer stable and planted on the road.

Rubber torsion trailer axles are more compact than other types of trailer axles, so they save space, weight and are lower to ground. Common leaf spring axles are generally larger, heavier and put chassis farther off of the ground.

Softer ride

The rubber elastomer springs (cushion and support is provided by four approximately 12″ long round rubber rods of approximately 1/2″ diameter inserted between the flat side of the suspension arm and the corners of the square axle tube) used

in torsion axles help smooth out the ride and absorb a lot of the bumps. Torsion axles are also quieter than leaf spring axles, which tend to squeak every time the spring bounces.

Flat tire- If you have a double axle trailer, you can pull short distances at low speed without a wheel on one axle.

Airstream axles have a 22 degree down start angle.

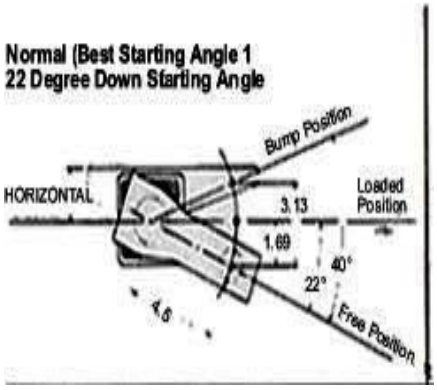

Portions of above from Dexter Axle and EHow.com

Onan Microlite 2500 LP Generator (This is the model used in the Airstream Interstate Van)

Question: My generator is not running properly, what should I check?

Here are some trouble shooting and maintenance tips for the Onan Microlite 2500 LP Generator. These tips may come in handy if you should start experiencing a lack of performance from your generator.

Here are three items that could cause your generator to not run or not run efficiently.

1. Low oil level. Your generator has a built in sensor that will shut the generator down if the oil level is low. Check your operator's manual for the oil capacity of your generator.
2. The air filter is dirty or clogged; this may affect the air fuel mixture and can cause uneven or rough operation of the generator.
3. A clogged air intake hose (check the foam filter on end of intake); this can cause uneven or rough operation of generator.

Properly maintaining your LP generator:

After the first 20 hours of initial break in, you will need to change the oil. This helps in making sure any remaining shavings or dirt are caught by the filter or flushed from the oil reservoir. After initial oil change you will need to change your oil and filter every150 hours or based on the conditions you're in such as very hot or dusty environments.

One last tip: don't forget to run your generator 2 hours each month with at least a 50% load. This will help keep the moisture out of the engine along with keeping your engine lubricated which will help with ease of starting, reliable operation and longer engine life.

Did you know?

How many RVs are there on Midwest highways?

According to the Recreation Vehicle Industry Association, a driver along major highways will see an RV once every two miles.

You know that good judgment often comes from a bad experience and a lot of those come from bad judgment!!

What kind of doctor fixes broken websites? A URLologist.

If you were half as funny as you think you are, you'd be twice as funny as you are now.

- Cassandra Clare, City of Bones

Have a good month and we will see you on down the road!

If you have a topic for this column, please send your suggestions to:
Dave Schumann, Airstream, Inc., 419 W. Pike Street,
Jackson Center, OH 45334

If your topic is published, you will receive a "Schu's News" t-shirt!