Airstream Tech Help Group

Howard Lefkowitz, #6077
Chairman
Chuck Helwig, #2868
Safety Officer
Phil Broomall, #2654
Jim Cooper, #1967
Jamie King, #804

This group, part of the WBCCI Technical Standing Committee, has been established to help the membership with any of their technical RV problems. Examples of questions that might be of interest to many members will be published in the Blue Beret. We will respond directly to you, in response to your email or letter describing a problem you are having. We hope you will find this new service of value in the care and feeding of your RV. You may contact us as follows: techhelp@wbcci.org or by mail: Howard Lefkowitz, 11508 Colt Terrace, Silver Spring, MD 20902

Charging Both Coach and Engine Batteries

Problem: When my 2001, 350 XL motorhome is in a campground for an extended period, I usually have to use my "Aux switch" to get the engine started. As I understand it, this combines the coach and engine batteries together for more starting power. I usually have shore power plugged in all of the time, which should be keeping all of my batteries charged. What is wrong?

Answer: The early gas motorhomes (both 350 and Land Yacht models) did not provide any charging capability for the engine battery. I believe this was for 2001 and earlier RV's. The early diesel units incorporated a special module, which provided the circuits necessary to charge both battery systems regardless of the power source. I believe in the 2002 models all of the Airstream motorhomes included a similar electronic module which provided this dual battery system charging capability. Your unit will also not provide a charge for the engine battery when the generator is running. The only, built in, available charge capability for this battery is the engine alternator. This is not a problem for your automobile, which can sometimes sit for months while you are on vacation and then start right up when you come home. In the motorhome, there can be high current draws from the engine battery when parked with the engine off. For example, the electric steps are hooked to the engine battery through a 25-amp circuit breaker. Therefore, if the steps are set to pull in every time you close the door you can run down the engine battery.

Your RV uses a 130-amp isolator to hook the alternator to both battery systems for charging. When you are using the 12-volt appliances, lights and other equipment, the engine battery must be isolated from the coach batteries. This is accomplished, inside the isolator, by using two high capacity diodes from the alternator terminal to each battery system which prevents coach loads from discharging the engine start battery.

To test your charging system and confirm that this is the problem follow these steps:

1. Hook up 110 VAC shore power
2. Measure the DC voltage on both battery systems
3. The battery **is** being charged if the voltage measurement is over 13 volts
4. The battery **is not** being charged if the voltage measurement is around 12.6 volts.

Figure (1) is a schematic of your 12-volt system. You can see the isolator in the lower right hand side. The 55-amp converter near the top center is the battery charger, which is only connected to the coach batteries. The converter (converts 110 VAC to 12 volts DC) and is powered by 110 VAC, which comes from either shore power or the generator. The connection from the coach batteries to the generator, on the far lower left, provides the power to start the generator and operate the circuit boards.

When you press the momentary "Aux Start Switch", you are powering on the AUX Start Solenoid (to the left of the isolator) and effectively connecting both battery systems together. This gives you three batteries for starting the engine as long as you hold on the AUX start switch. If we held this momentary switch on, with the RV connected to shore power, we would be charging the engine battery as well as the coach batteries.

One possible solution to this problem is to obtain a second charger and hook it up to the engine battery whenever you are on shore power or are running the generator. A trickle charger is not very effective for a low engine battery, which has to supply hundreds of amps for a short time, so you will need at least a 10 or 15 amp charger. A much better solution is to

convert the charging system so that it will operate, just like the diesel and later model gas motorhomes, and automatically charge both battery systems regardless of how the RV is powered.

Figure (2) illustrates an Intellitec 53-00362-100 Bi-Directional Isolator Relay (BIRD) that provides a signal for a solenoid (isolator relay Intellitec 77-90000-110) that can hook the two battery systems together. The BIRD monitors both battery systems and if either one is higher than 13.1 volts, for more than 2.5 minutes, it sends a signal to the isolator relay which will stay on until the voltage drops below 12.6 volts. When this relay is on both battery systems are connected together and being charged by the 55 amp converter.

Reference (1) provides the following description of the BIRD operation.

Engine Alternator Charging the Batteries

When the ignition switch is turned on and the engine is running, the system senses the level of voltage on the chassis 12-volt system. When this voltage goes above 13.1 volts for approximately 2.5 minutes, as happens when the engine is running normally (normal alternator output voltage of a cold engine is approximately 14.4 volts), it will close the isolator relay providing charging current to the coach battery. This delay allows a cold engine an opportunity to start and warm up before having the heavy load of a discharged coach battery placed on it.

If the voltage should fall below 12 volts for more than about 1 minute, the relay will drop out to feed all the alternators available output to the chassis (engine) battery to keep the engine running. This might happen when the alternator is not able to supply sufficient current to all of the loads and charge the coach battery at the same time. When the chassis voltage goes to 13.1 volts again, the relay will again close in about 2.5 minutes to retry to charge the chassis battery. The resultant flickering of lights would alert the driver of the system overload.

Converter Charging the Batteries

When the coach is plugged into shore power and the ignition is off, the unit senses the voltage on the coach batteries. When this voltage goes above 13.1 volts for approximately 2.5 minutes, as happens when the converter is not heavily loaded, it will close the isolator relay providing charging current to the engine battery. If the voltage should fall below 12.6 volts for more than about 1 minute, the relay will drop out to prevent the coach loads from discharging the chassis battery. This might happen when coach loads heavily load the converter. When the coach battery voltage goes above 13.1 volts again, the relay will again close in about 2.5 minutes to retry to charge the engine battery.

The isolator relay, Figure (3) is designed for continuous operation at 100 amps. It will handle a short-term load of 500 amps. While operating it draws less than one amp. This relay is used as a replacement for the "AUX. Start Solenoid" that came with your Airstream and does not have the capability of handling the duty cycle or current requirements. It will also serve as the AUX start relay to parallel all the battery systems and can be operated with the existing switch and wiring.

Figure (4) illustrates the typical installation diagram for the BIRD and isolator relay. The 350 XL and gas Land Yachts usually did not have a chassis battery disconnect relay although the Classic gas motorhomes did have both coach and chassis disconnect relays. The disconnect relays are retained with their existing wiring.

Figure (5) illustrates the new 12-volt wiring schematic with the dual battery charging system installed. This system will work with your Generator as well as shore power to keep both of your battery systems fully charged. It is completely automatic and will easily operate with your 55-amp converter. Another advantage is that in an emergency, if both of your battery systems get low, on an extended camping trip, you will have the generator output voltage as a back-up source to help run the engine.

Installation

1. Before you do any work on the 12-volt system, you must **disconnect the battery ground terminal wires** on each battery. Be sure to remove all of the wires and dress them back so they connect make contact with the terminals.
2. Locate the "130A isolator" and the "AUX Start Solenoid". The isolator is usually mounted on the firewall under the front hood. The start solenoid is usually located close to the battery compartment.
3. On the 130A isolator disconnect the center terminal wire (alternator) and hook it to the engine battery terminal (on the 350 XL this wire is red). Verify that you have the correct battery terminal. You can leave the (black) coach battery wire hooked up since the 130A isolator is no longer functional.
4. Replace the "AUX Start Solenoid" with the new isolator relay. Wiring is the same with the large heavy-duty wires going to the large terminal screws.

continued on page 24

Charging Both Coach and Engine Batteries continued from page 23

5. Mount the BIRD on the firewall or near the new relay in a position protected from the weather. The wires do not have to be heavy duty since they are for the electronic voltage sensors in the BIRD. You are monitoring the coach battery voltage and the engine battery voltage (through the ignition switch). Be sure and provide a good ground for the BIRD and a wire to the isolator relay coil circuit.
6. Find a 12-volt source from the ignition circuit to connect to the BIRD "Ignition" terminal that will be used to monitor the engine battery voltage when you start the engine.

Check out your wiring and installation before reconnecting the battery ground wires. Both batteries should be charging and have the same voltage regardless of which power source you are using (engine, generator or shore power). Reference (1) has a Trouble Shooting section which can help in finding any problems.

I frequently get questions about whether an installed solar system is actually working. With the engine and generator off and no shore power simply measure the voltage across the coach batteries. If it is above 13 volts then the solar panels are charging the batteries. Always make sure there is no surface charge before making these measurements. Simply turn on a bunch of lights for a minute or two, turn them off and then make the measurement.

The Intellitec BIRD and isolator relay (solenoid) cost about $125 for both. Reference (2) lists several companies that sell both components. They may also be available on ebay.

Reference (1), Bi-directional Isolator Relay Delay Service Manual:
http://www.docstoc.com/docs/98477976/BI-DIRECTIONAL-ISOLATOR-RELAY-DELAY

Reference (2), Sources for purchase of the BIRD and isolator relay:
http://rvpowerpartsplus.net/index.php?main_page=index&manufacturers_id=6
http://www.randkproducts.com/product_info.php?pName=intellitec-0000839000-bidirectional-isolator-relay-delay-dies
http://www.mccampingsupplies.com/index.php?cPath=549_613_624&main_page=product_info&products_id=8232
http://www.rvparts.com/product-31-0000362100
http://www.ecovantageenergy.com/catalog/items/item3434.htm

Howard

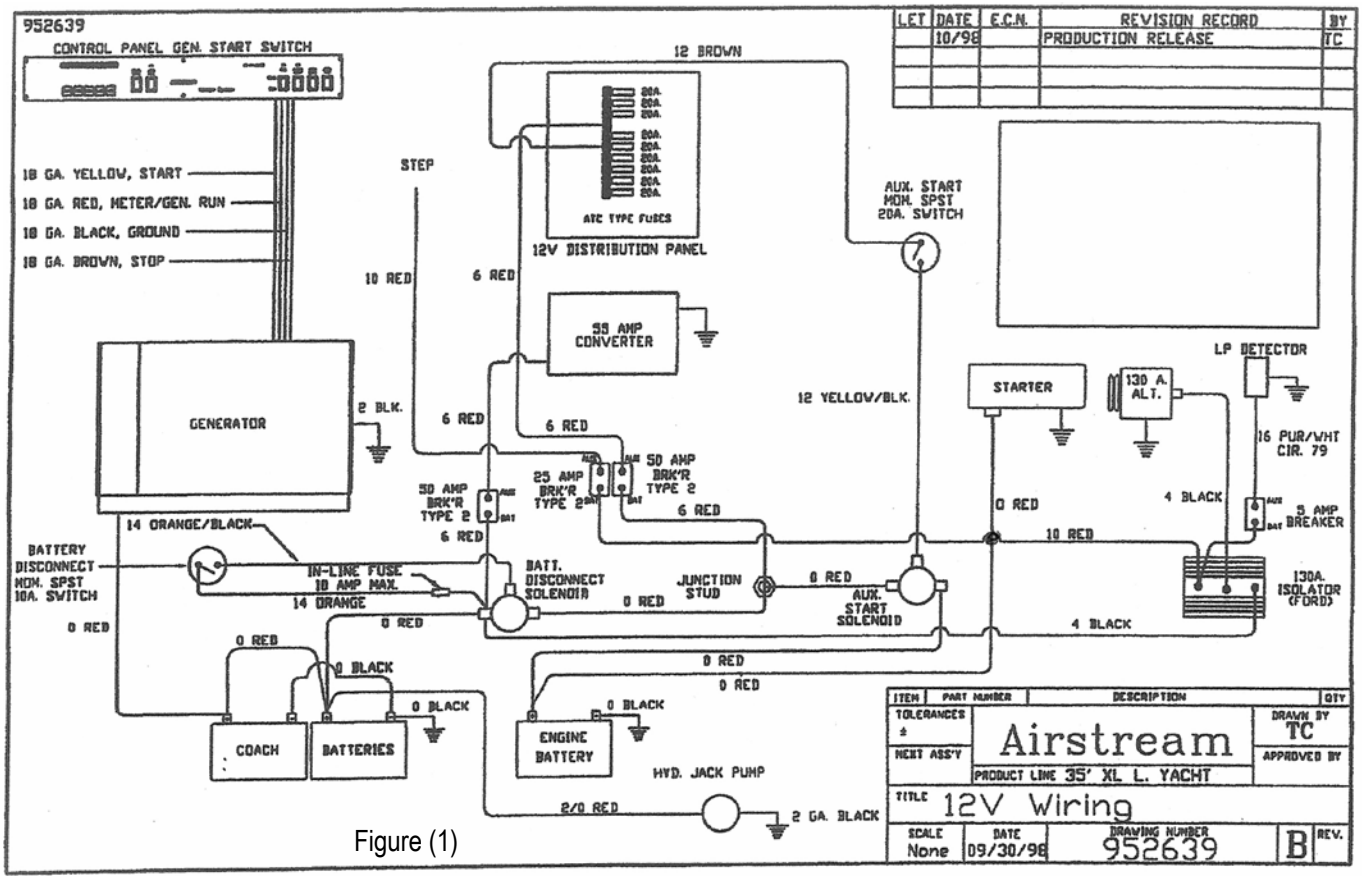

Figure (1)

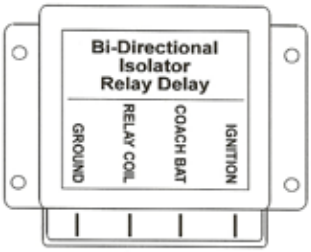

00-00362-100 BIRD GAS

Figure (2)

Product Description

The BIRD (BI-DIRECTIONAL ISOLATOR RELAY DELAY) performs two important functions. It provides a method of charging the coach battery from the engine alternator and charges the chassis battery from the converter when the coach is plugged into shore power. When neither battery is being charged, the batteries are isolated from each other to prevent the loads of one battery from inadvertently discharging the other battery. The unit is housed in a plastic enclosure suitable for mounting under the hood, out of direct water spray. It operates in combination with a continuous duty solenoid to connect the two batteries at the proper times for charging.

Intellitec Isolater Relay 100 amp

Cat No: MT77-90000-xxx

Intellitec Isolater Relay 100 amp
Intellitec.s Isolator Relays are specifically designed to be used to isolate two battery systems. In this application, these relays are required to operate with almost no voltage across their contacts and carry currents ranging from milliamps to hundreds of amps. These relays have been designed and are built to meet these demanding conditions. The 100 amp Isolator Relay is designed for most common gasoline engines, while the 200 amp Isolator Relay is designed for heavier duty applications.

Specifications:
Part Number 77-90000-100
Nominal Actuation Voltage 12 Volts
Actuation Current 0.9 Amps
Continuos Duty Yes
Minimum Actuation Voltage 9 Volts
Maximum Continuous Carry Current 100 Amps
Maximum Short Term Current (30 Sec) 500 Amps
Maximum Ambient Temperature
Minimum Ambient Temperature
Contact Life at Full Load

Figure (3)

TYPICAL INSTALLATION DIAGRAM

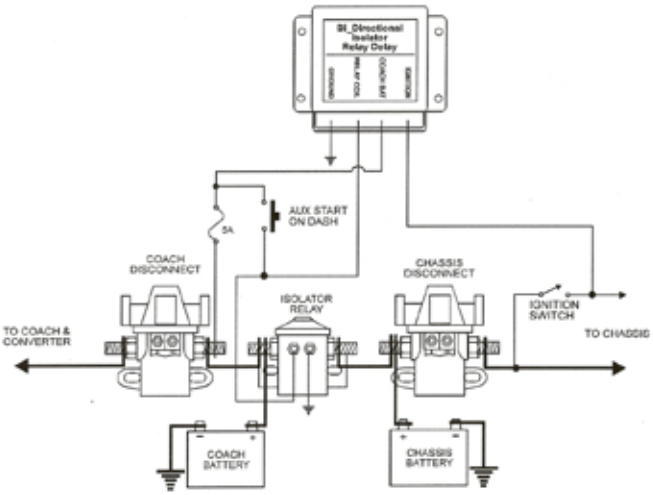

Figure (4)

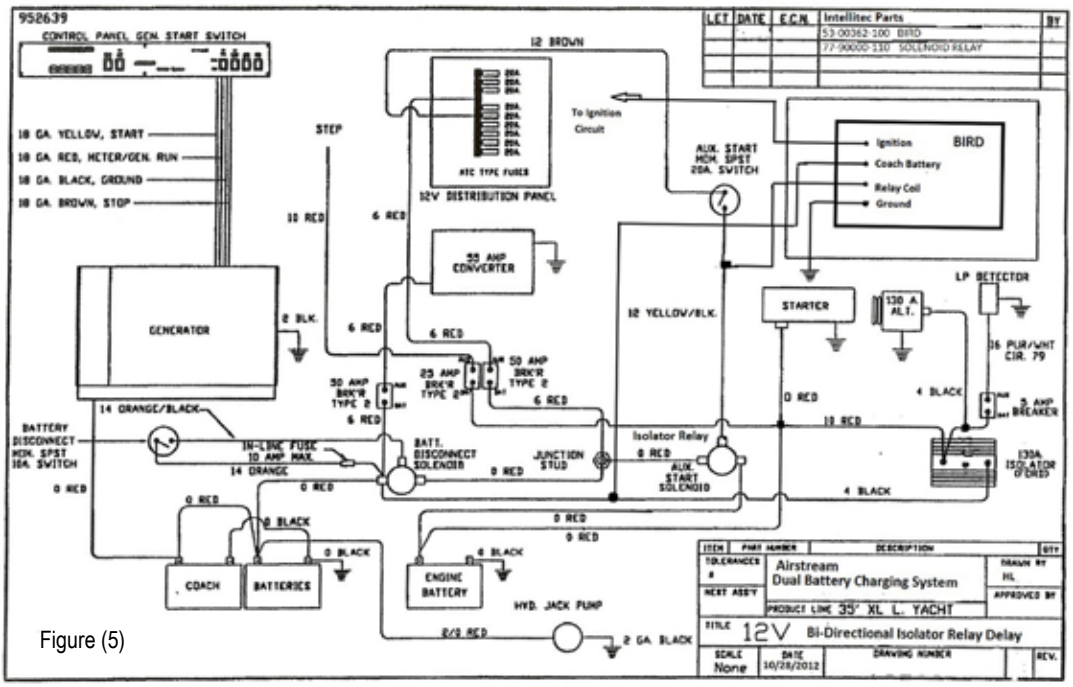

Figure (5)